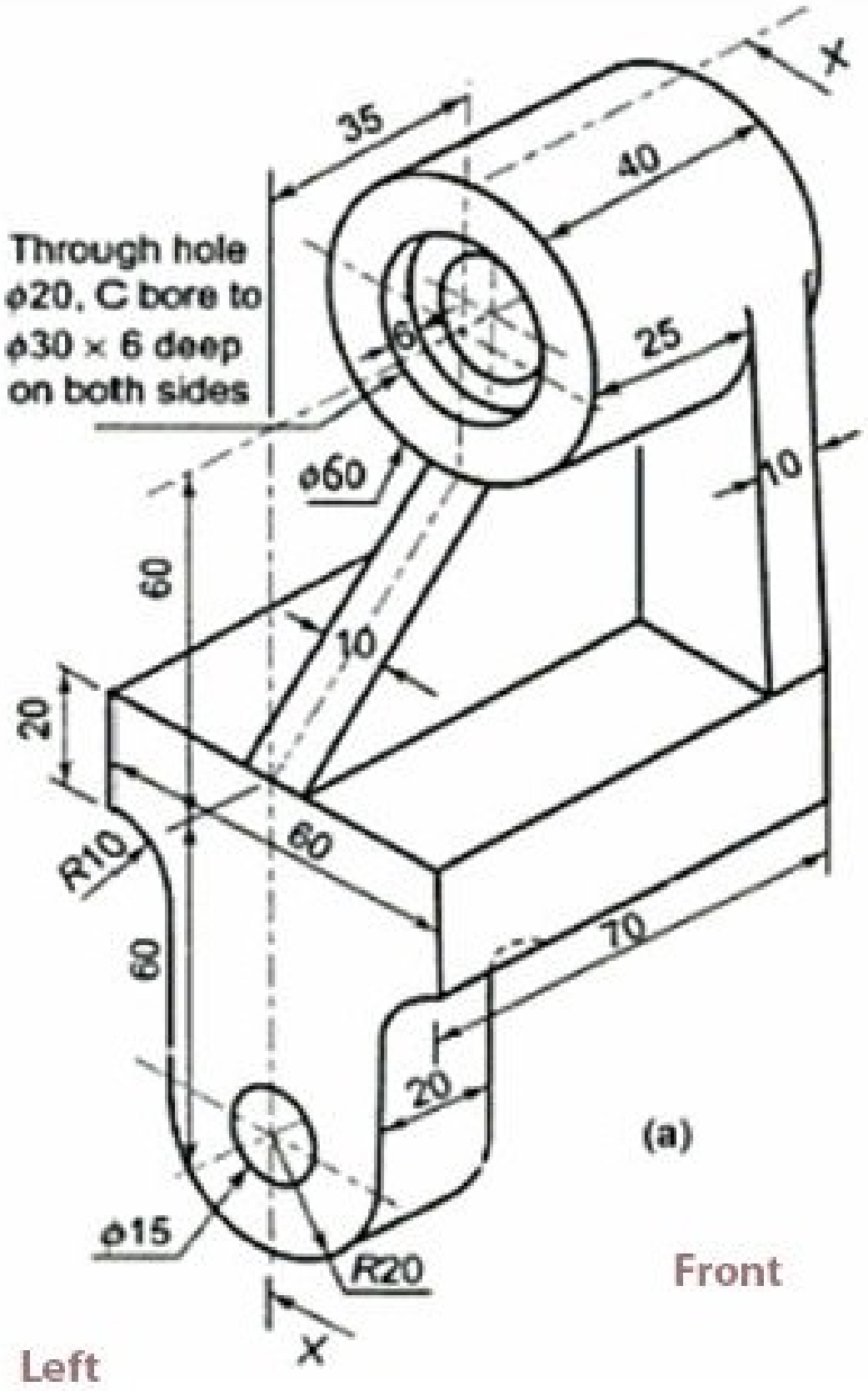
Through hole
ϕ20, C bore to
ϕ30 × 6 deep
on both sides
35
40
25
6
ϕ60
10
60
10
20
R10
60
60
70
20
ϕ15
R20
X
X
(a)
Front
Left